DIPOMPO
THE 'PUMP' SOLUTION

Pump Model CPS 150-100-310

Speed 1450rpm

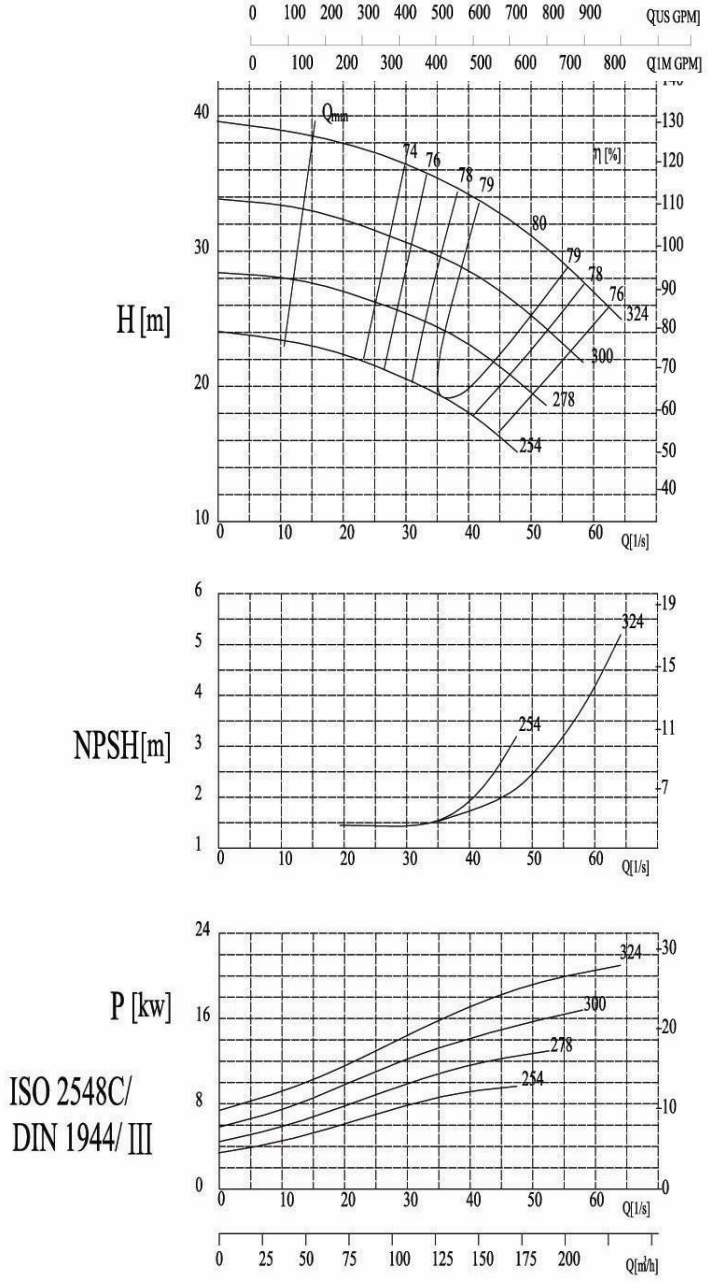

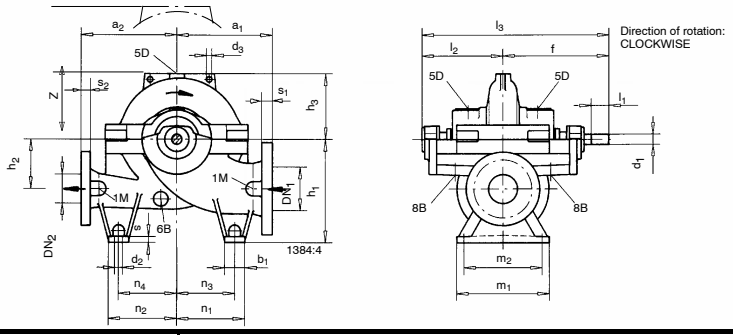

Pump Size	FLANGE DIMENSIONS				PUMP DIMENSIONS									
	DN1	DN2	s1	s2	a1	a2	d3	f	h1	h2	h3	l2	l3	z
CPS 150-100-310	150	100	37	32	330	330	19	415	355	170	225	300	715	450
	FOOT DIMENSIONS									SHAFT		PUMP WEIGHT (kg)		
	b1	d2	m1	m2	n1	n2	n3	n4	s	d1	L1			
	70	18	320	270	235	235	200	200	20	35	80	225		